Data Sheet

Article number: 23017781126K
Description: E+G Handwheel
VR.300 FP-A26-K

Measures

VR.FP-A

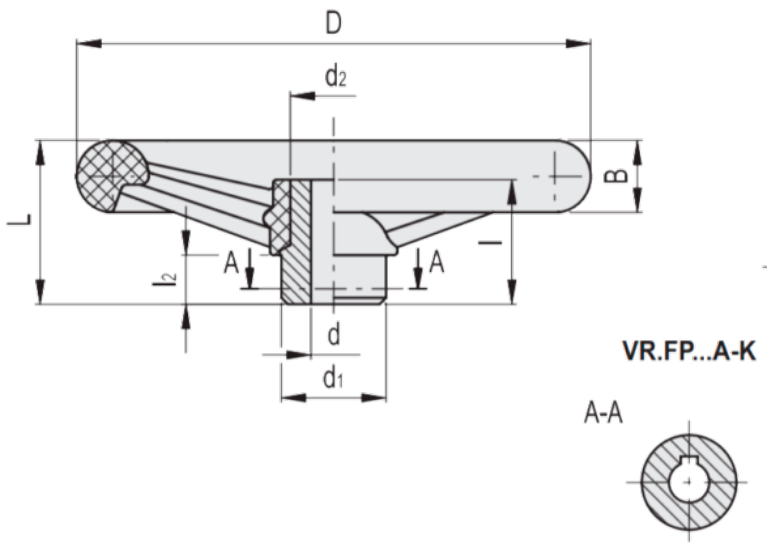

B	= 32	l	= 56
b	= 8	L	= 78
C (N*m)	= 800	L (J)	= 33
D	= 288	l2	= 15
d1	= 58	t	= 29.3
d2	= 47		
d\\\'	=		
d\\\'\\\'	=		

Product drawings and brochures of any kind may contain errors for which Brd. Klee A/S cannot be liable.